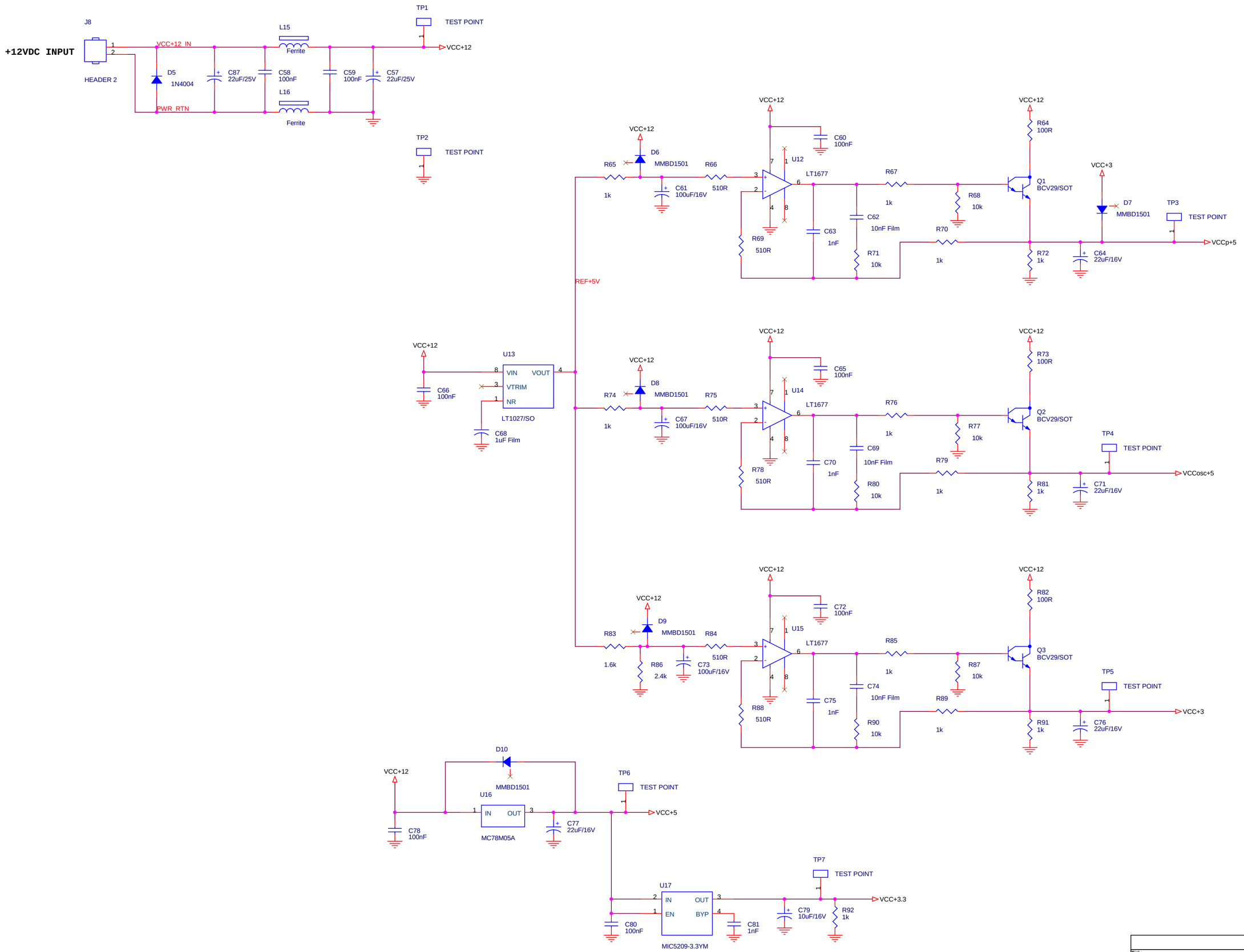

Title	CESR RF SYNTHESIZER II	
Size C	Document Number LEPP 6045-202	Rev 0
Date: Friday, September 16, 2005	Sheet 2 of 2	